BLOCK DIAGRAM

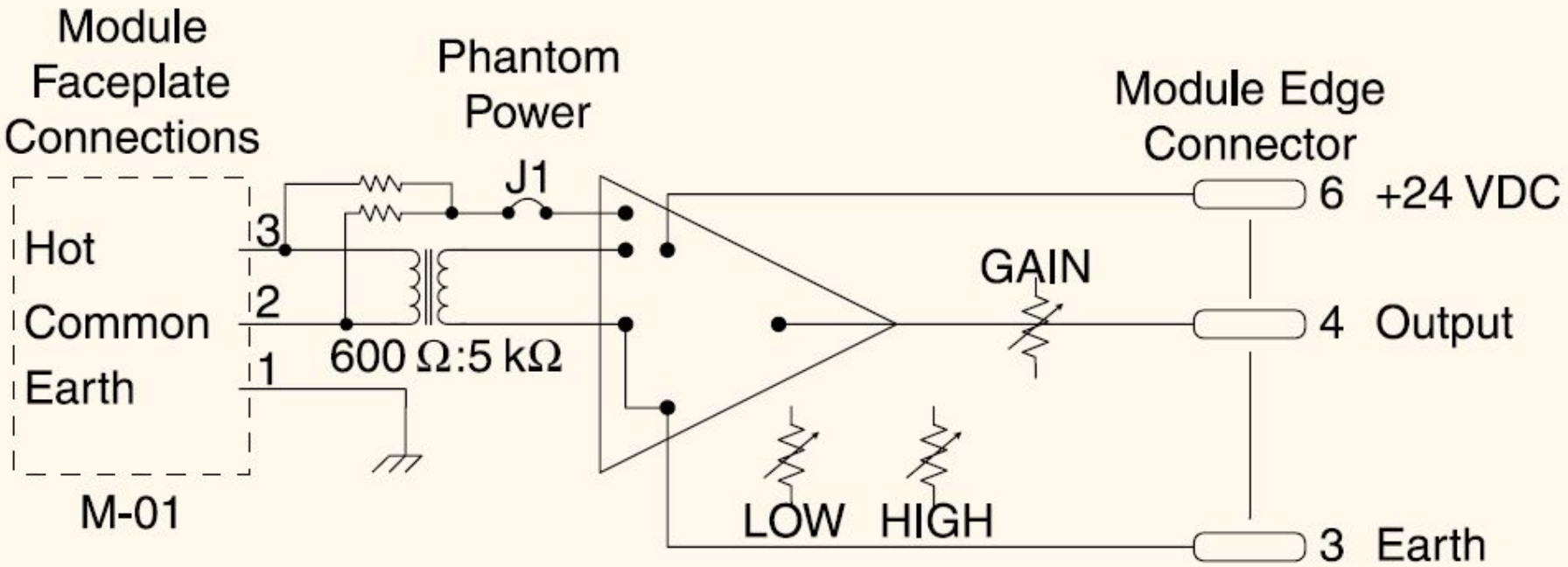

TOA MODULE M-01

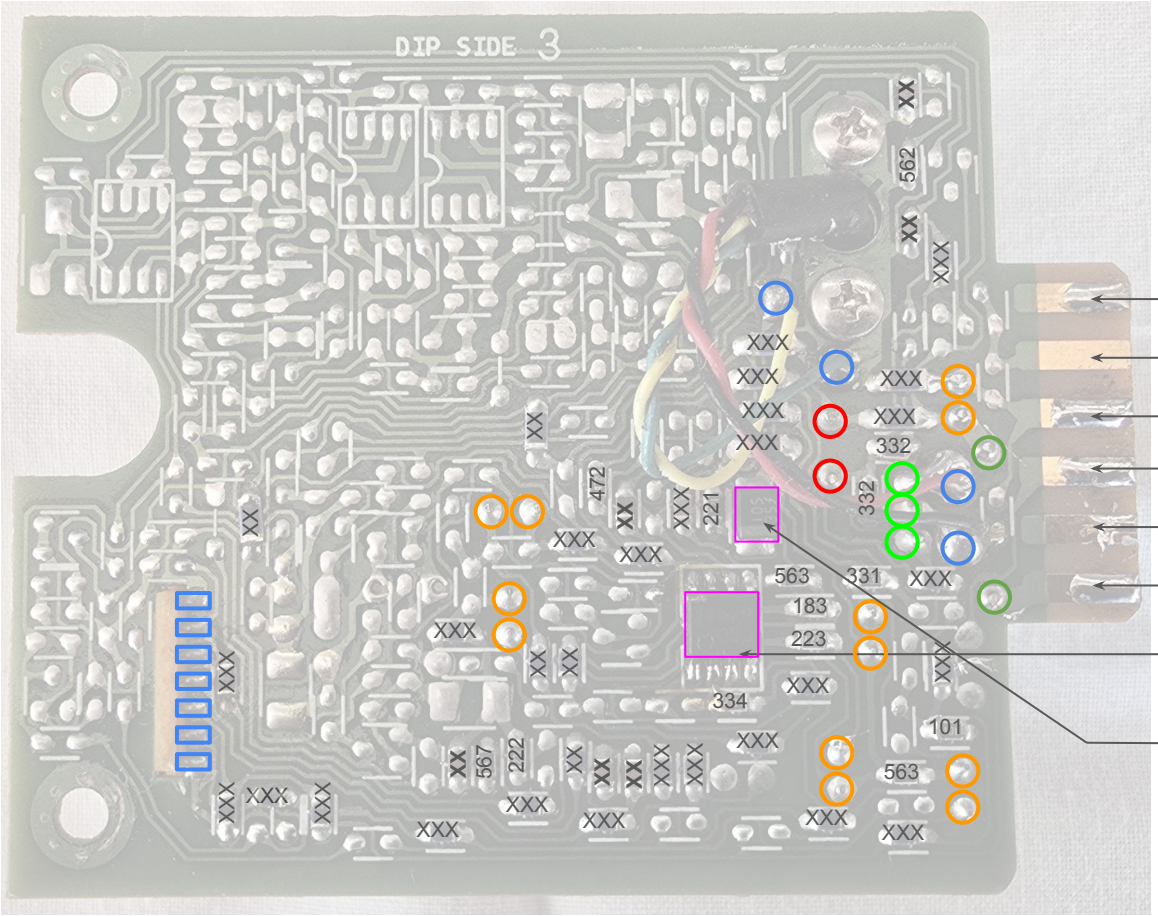

CAPACITORS
XX = TANTALUM ?
XXX

6. **+24VDC**
5. **MIX OUT**
4. **SIGNAL** (OUTPUT)
3. **COMMON** (EARTH)
2. **MUTE BUS 1**
1. **UTE BUS 2**

IC1 UPC4570

DIODE _105 35_ (MURS105
875mV@1A) ??

SMD COMPONENTS

TOA MODULE M-01

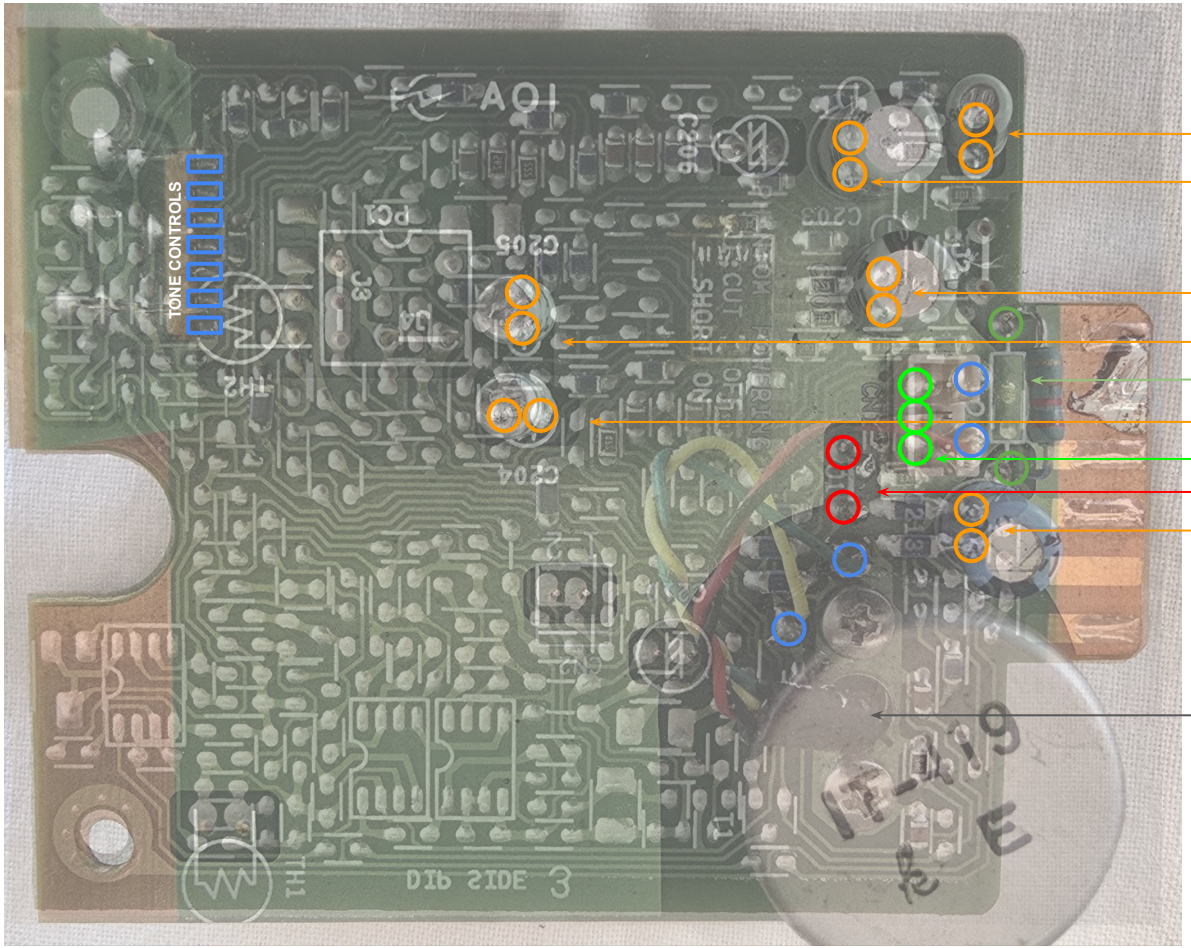

C208 POL CAP **10uF 16V**

C203 POL CAP **47uF 16V**

C201 POL CAP **47uF 16V**

C205 POL CAP **2.2uF 50V**

R127 RESISTOR **220 Ohm**

C204 POL CAP **10uF 16V**

CN1 INPUT CONNECTOR

J1 PHANTOM POWER

C213 POL CAP **100uF 25V**

AUDIO ISOLATION TRANSFORMER

THROUGH HOLE COMPONENTS

TOA MODULE M-01

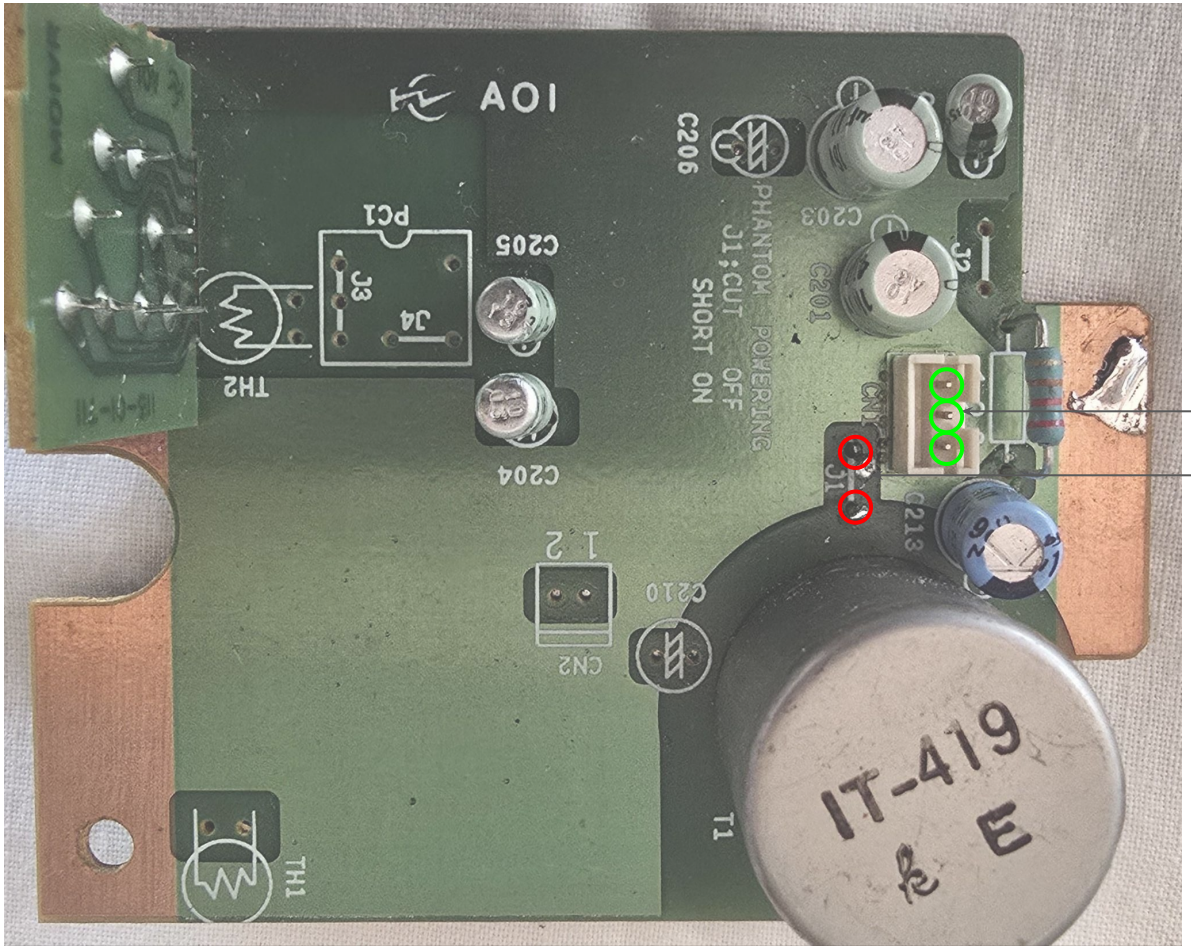

INPUT CONNECTION

1. EARTH
2. COLD
3. HOT

CN1 INPUT CONNECTION

J1 PHANTOM POWER JUMPER

EXTERNAL CONNECTORS

TOA MODULE M-01

IC1
4570 is an ultra low-noise, wideband high slew-rate, dual operational amplifier

LOW 47k
PIN 4
PIN 5

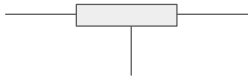

HIGH 47k
PIN 6
PIN 7

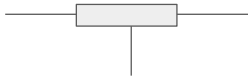

GAIN 47k
PIN 1
PIN 2
PIN 3

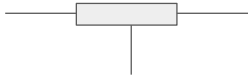

TONE CONTROL BOARD COMPONENTS
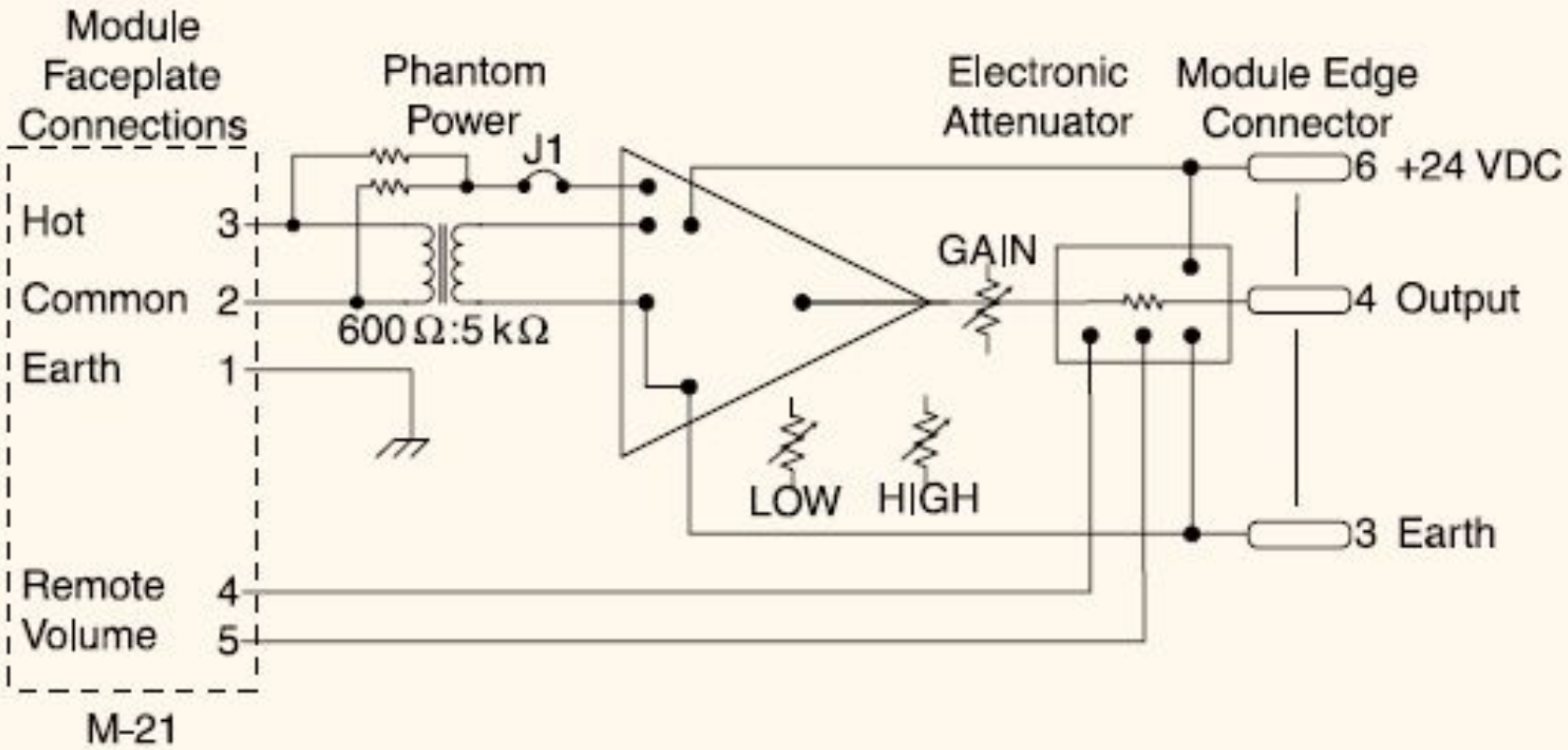
BLOCK DIAGRAM